Rev. :1.4

OXYGEN CONCENTRATOR
[KSOC SERIES]

USER'S MANUAL

Read carefully before use!

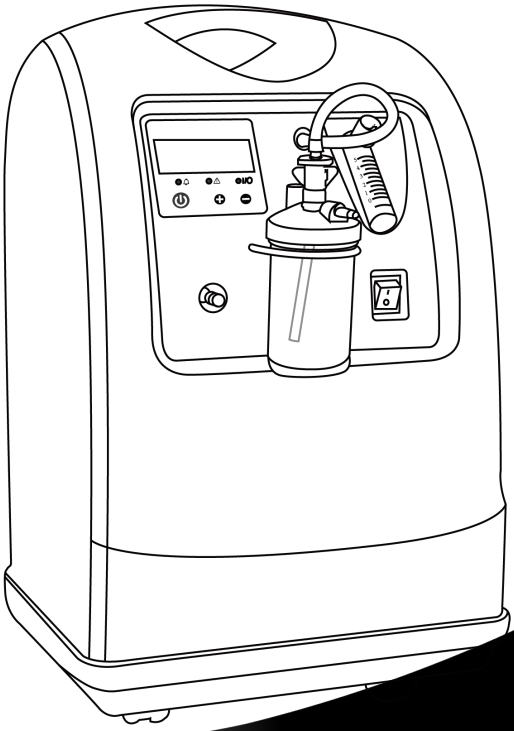

Drawing, Symbols, Abbreviation

Note: Some symbols may not appear on your equipment.

Symbol	Explanation	Symbol	Explanation
	Caution		Increase or decrease (Knob)
	Fragile-handle with care		Type BF applied part
	Keep dry	EC REP	Authorized representative in the European Community
	This side up		Class II equipment
	ON (power)	LOT	Batch code
	OFF (power)		Date of Manufacturer
	Alternating current		Manufacturer
	Operating instructions		Marking of electrical and electronic equipment in accordance with 2012/19/EU (WEEE)

Table of Contents

1 Safety Guidance.....1

2 Working Principle & Flowchart.....5

3 Intended Use and population.....6

4 Front and back view.....7

5 Construction and Main Material.....8

6 Technical Parameters.....9

7 Models and Performance.....11

8 Working Conditions.....11

9 Operation Instruction.....12

10 Atomization (for -M &-N models).....14

11 Timing and Remote Control.....14

12 Alarm and Indicator System.....15

13 Maintenance and Service.....16

14 Disposable.....18

15 Storage and Transportation.....18

16 Troubleshooting.....19

17 Service.....20

18 EMC Guidelines.....21

1 Safety Guidance

WARNING TIPS

1. **For the first time use, remove the fixed bolts on the bottom of the oxygen concentrator with tool we offered before using the concentrator.**
2. **If do not remove the bolts on the bottom of the oxygen concentrator, the concentrator will not work well.**
3. **Keep the bolts for next transportation.**

The picture of the fixed bolts on the bottom of oxygen concentrator and tool as bellow:

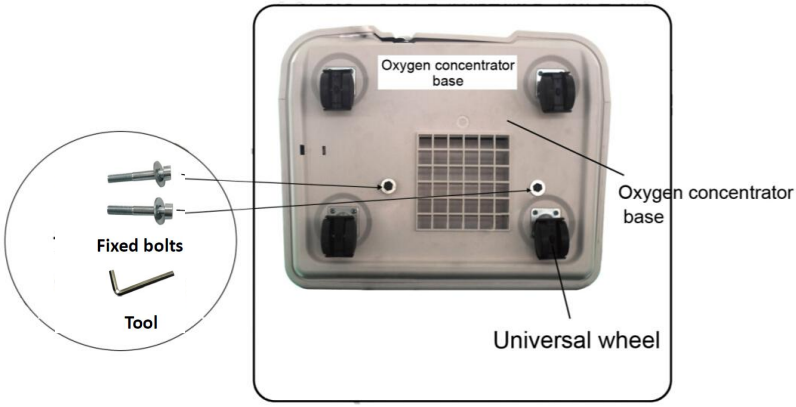

The picture is only for reference; please make the object as the standard.

⚠ Safety Instruction

1. It uses the power of AC 220-240V 50/60HZ or AC110V 60HZ.
2. If any object or liquid enters the concentrators, immediately disconnect the power plugs, and have them examined by the expert before re-use.
2. And if the concentrator is to be left unused for a long time, unplug the plug from the power outlet; and ensure to withdraw the power plug instead the power cord.

⚠ **Warning**
To case of possible oxygen concentrator failures or power shut down. People in urgent need of oxygen and seriously ill patients must prepare other oxygen-supply devices for emergency use (such as oxygen cylinders, oxygen bags).

⚠ **Warning: No smoking while using the oxygen concentrator.**

1. Safety tips for oxygen concentrator

A. Do not use the product near the heat resource or fire
B. The product is not appropriate to use in too humid environment (such as bathroom). During the operation, ensure there are no humidification devices within 2 meters around, and after cleaning filter components, they must be totally dried before re-use.
C. Do not operate the product near flammable materials as grease oil, detergent, etc. Neither uses such materials and their analogue to the product.
D. Do not use the product in a confined space, at least 15cm away from the obstacles such as the walls and windows that prevent the air circulation.
E. The equipment has gotten through the electromagnetic compatibility test conducted by testing center for SGS product, so the product won't produce the harmful RF interference if used in residential area. But in order to keep normal use, please do not use the oxygen concentrator near high frequency disturbing equipment, such as speaker, MRI or CT

etc.

F. The patient maybe is an intended operator, do not service and maintain while the ME equipment is in use.
G. In certain circumstances oxygen therapy can be hazardous and that seeking medical advice before using the concentrator is advisable.
H. The user is forbidden to change the components or modify the equipment.
I. Do not disassemble the power cord, if the power cord is damaged, it can be replaced by maintenance person, when change the power line, do not need to make a distinction between the neutral line and live line.
J. The oxygen concentrator should be located so as to avoid pollutants or fumes.
K. Turn off the concentrator after use.

2. Safety tips for electrical appliance

A. Close the concentrator before accessing it for different power outlet.
B. Please pay attention to electricity safety. Do not turn on the product if the plug or power lines damaged and ensure to cut off the power when cleaning the concentrator or cleaning and replacing the filters.
C. Install the regulator device when the voltage is higher than the normal range or in fluctuation.
D. To extend the life span of the concentrator, reboot 5 minutes after each shutdown to prevent the compressor to start under pressure.
E. Do not operate the concentrator with open filter window or case.
F. Non-professionals shouldn't open the shell
G. Children are not allowed to operate the concentrator alone in case of accident
H. Do not position equipment to make it difficult to operate the disconnection device.

3. Safety tips for oxygen Inhale

A. Follow the doctors' guidance for it is used for medical treatment.
B. The person allergic to the inhalation of oxygen should use the product carefully.
C. The oxygen flow rate shouldn't be too high, but upon the request of the doctor.

D. Be careful of the work environment, normal temperature range: 5℃－40℃., relative humidity: ≤75%
E. Keep it stable at work and avoid sloping or inverting
F. Do not pump the equipment as oxygen bag when the bottle has water.
G. The water in the bottle should not be too much in case of the overflow (please keep the water level between MAX and MIN), and change the water often. Use of certain humidifiers and administration accessories not specified for use with this oxygen concentrator may impair the performance.
H. Different bottles may affect the performance of the oxygen concentrate, please replace the bottle with the original bottle provided or certified by our company.
I. Clean and replace the filter sponge in case of the block of the outlet and outlet of oxygen delivery and affect the life of oxygen concentrator. In order to keep the concentrator in usual use, please substitute the filter sponge both in outlet and delivery with those provided or certified by our company.
J. The cannula as accessory provided by our company is a sample for a try. Use the cannula personally to keep it clean and health; clean and disinfect it frequently; it is suggested using disposal cannula each time.
K. The temperature of application component (including gas circuit) is over more than 41℃, but not more than 46℃.
L. The contact between application component and patient is short-contact.

4. Atomization Tips

A. Please check out the connection between nebulizer and oxygen concentrator, because the air leakage will affect the atomization.
B. Please keep the water clean in atomizing cup and without any precipitation and impurities, otherwise the tube and the splitter will be blocked.
C. Please confirm the water poured into the atomization cup not beyond 8ml.
D. To avoid cross-infection, it is recommended that each patient uses nebulizer accessories individually.
E. When operate the atomization of the oxygen concentrator that has

atomization function, please connect the atomization tube to the atomization outlet after unscrewing the atomization end cap.

F. When operate the atomization of the oxygen concentrator that has atomization function, please close the oxygen outlet and adjust the flow meter to “0”.

G. Different nebulizer has different atomizing effect, please use the nebulizer and accessories we provided or we authenticated.

2 Working Principle & Flowchart

1. Working Principle

KSOC series of Medical oxygen concentrator is made up of filter system, compressor, adsorb tower, electrical control system, humidifier system and the reasonable air course from case structure. It adopts the current world’s advanced transformation absorption (PSA) principle. It separates the oxygen and nitrogen under common temperature and pressure, then obtain the medical oxygen which consists with the Medical standards.

2. Working Theory

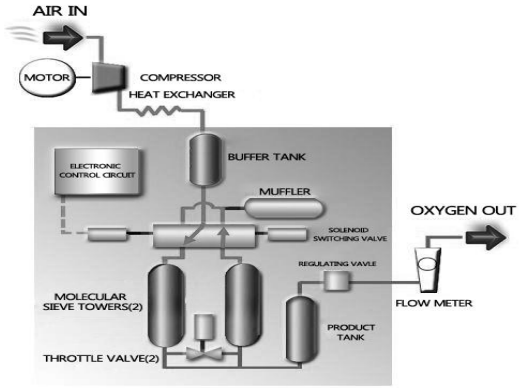

3. Electrical Control Chart

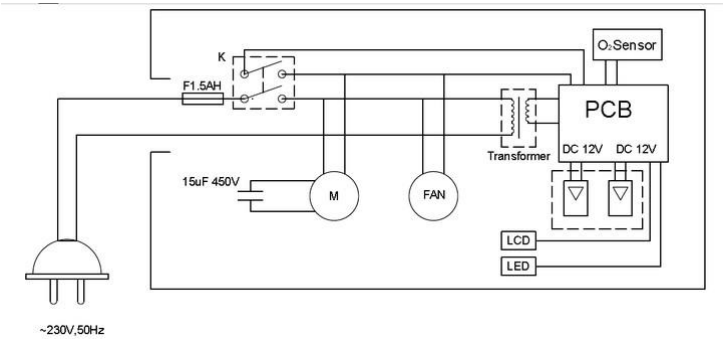

3 Intended Use and population

Intended Use: For medical institutions to prepare oxygen for patients with hypoxia.
Intended patient population: Adult and child;
Medical condition: medical institutions; institutions or healthcare facilities with health care capabilities.
Intended user: medical professional or trained patient;
Contraindications: patients with oxygen poisoning and oxygen allergy are forbidden.
Oxygen concentrator mainly uses air as raw material and uses molecular sieve pressure swing adsorption process to produce oxygen with oxygen concentration ranging from 90% to 96%(V/V).For medical institutions and other production of oxygen for hypoxia patients to use oxygen.

Warning: The oxygen concentrator is not for life supporting use or unconscious patients.

4 Front and back view

Front View

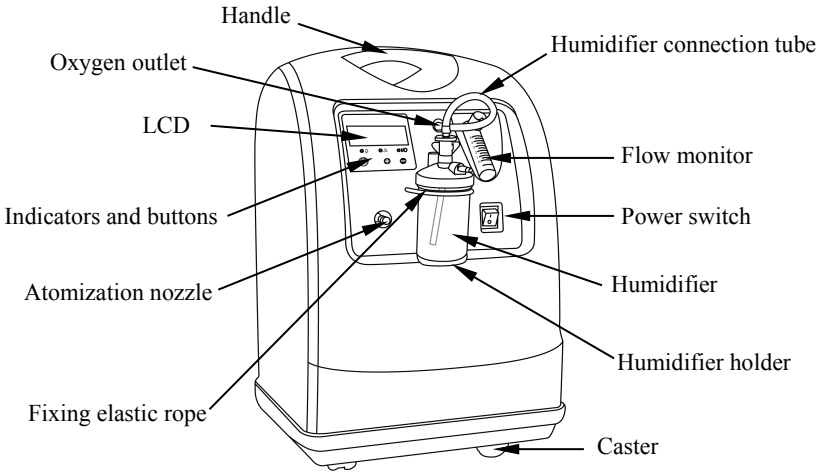

Back View

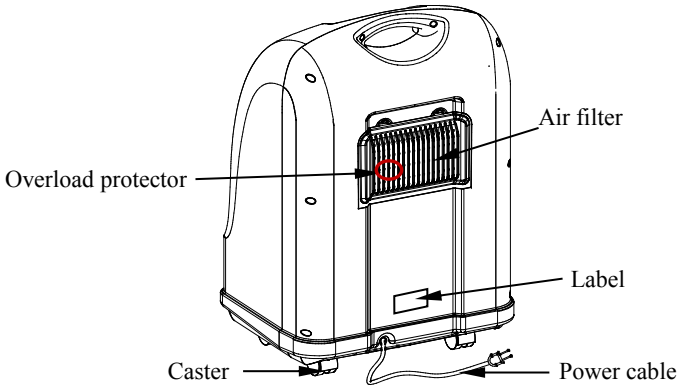

5 Construction and Main Material

Main Structure	Material
Filter system	Foam filter, AB Sresin
Compressor	ZL102cast alum, filling PTFE
Absorption chamber	6063 alum alloy, O5 zeolite
Electrical system	PCB, Silicone components
Humidifying system	ABS resin, Polypropylene
Case	ABS resin

6 Technical Parameters

Table 1 Main technical specification

Item	Max Flow (L/min)	O2 density (V/V)	Noise dB(A)	Dimension (mm) (L*W*H)±10 mm	Power consumption (VA)	Weight (Kg)	Atomization Amount (mL/min)	Timing period	Remote control distance
KSOC-3	3	93%±3%	≤53	380X320X590	≤320	19	N/M	10h	N/M
KSOC-3N							≥0.2	10h	N/M
KSOC-3T							N/M	10h	50m
KSOC-3M							≥0.2	10h	50m
KSOC-5	5		≤54		≤480	18.3	N/M	10h	N/M
KSOC-5N							≥0.2	10h	N/M
KSOC-5T							N/M	10h	50m
KSOC-5M							≥0.2	10h	50m
KSOC-8	8						N/M	10h	N/M
KSOC-8N							≥0.2	10h	N/M
KSOC-8T							N/M	10h	50m
KSOC-8M							≥0.2	10h	50m

The density range output by KSOC-3 series:

- 0.5 L/min ~3L/min:≥90%;
- 4L/min:≥82%;
- 5L/min:≥78%

The density range output by KSOC-5 series:

- 0.5 L/min ~3L/min:≥92%;
- 4L/min:≥91%;
- 5L/min:≥90%

The effect of altitude on oxygen density delivered by oxygen concentrator：

Altitude	≤800m	800m～1500m	1500m～2000m	2000m～3000m	3000m～4000m
KSOC-3	≥90%	≥80%	≥75%	≥65%	≥55%
KSOC-5	≥90%	≥80%	≥75%	≥63%	≥53%
KSOC-8	≥90%	80%	≥70%	≥60%	≥50%

Outlet pressure has effect to oxygen density:

When the outlet pressure is Zero, the standard flow is: KSOC-3 series is 3L/min; KSOC-5 series is 5L/min; KSOC-8 series is 8L/min.

When the outlet pressure is 7kpa, the standard flow is: KSOC-3 series is 2.7L/min; KSOC-5 series is 4.5L/min; KSOC-8 series is 7.2L/min.

Function of outlet oxygen density and rated flow:

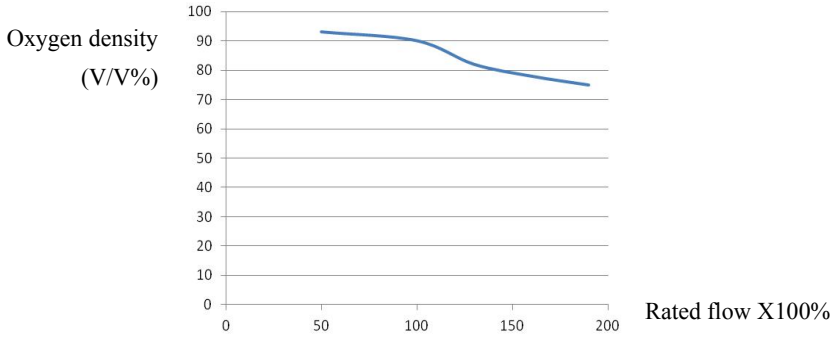

7 Models and Performance

“N” Model is feature configuration, which is added air atomization function on the basic functions.
“T” Model is feature configuration, which is added the function of Remote Control.
“M” Model is feature configuration, which is added the functions of air atomization and Remote Control.

All models of this series are equipped with function: current run time, total running time function, timing, and power off alarm.

Class of safety type: It belongs to CLASS II equipment
Type BF Applied part for safety type
Oxygen concentrator is non AP/APG device
Protection class of case: IPX0
Running mode: continuous operation
Outlet pressure: 0.04MPa～0.07MPa
Pressure range of atomization outlet: 60kPa~250kPa
Safety valve pressure range: 15kPa～40kPa
Safety valve pressure range: 250kPa～280kPa
Overloading protector specification:
KSOC-3/5: 250V AC, 3A 110V AC, 5A
KSOC-8: 250V AC, 5A 110V AC, 8A

8 Working Conditions

Power: AC 220-240V 50/60HZ or AC110V 60HZ
Environment temperature: 5℃～40℃
Relative humidity: ≤75%
Air pressure: 86kPa～106kPa

9 Operation Instruction

Put the oxygen concentrator in a convenient and safe place where there is air flow and make sure its back case is at least 15 cm away from the wall, window or any other things that are obstructing the airflow.

LCD, Indicators and Keys

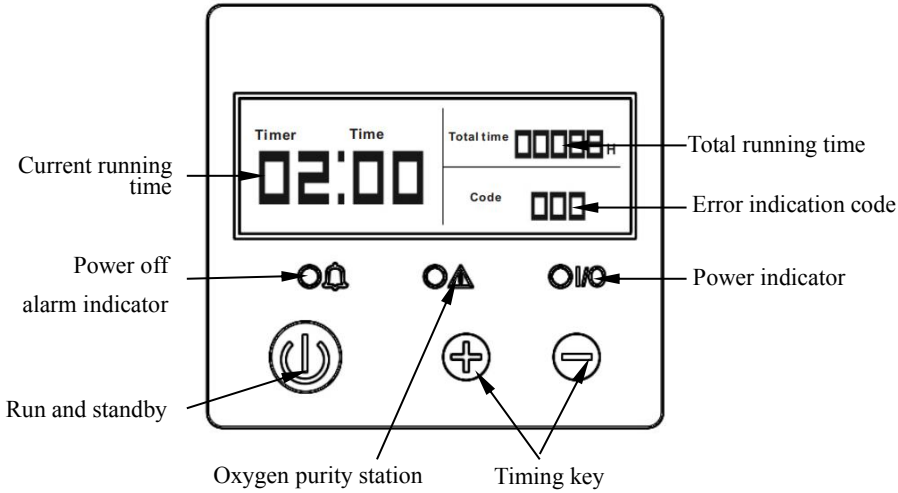

1. Make sure the power switch is on the “off” position.
2. Plug the oxygen concentrator power cord to the socket of the power supply AC 220-240V 50/60HZ or AC110V 60HZ and connect the power.
3. Unscrew the humidifier; pour the distilled water or cold water into the humidifier to its prescribed level from Max and Min level in case of over flow or uneven humidifier for lack of water as below figure shows.

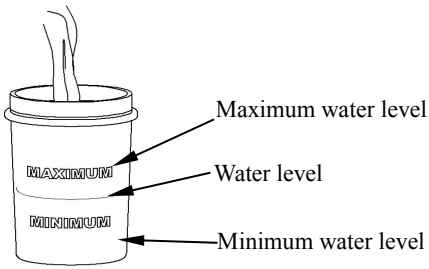

4. Put the humidifier onto the oxygen concentrator and fix it with the rubber band. Connect the outlet of the oxygen concentrator and inlet of the humidifier with the soft tube.
5. Connect the oxygen cannula of nasal pipette or oxygen tube with the humidifier outlet tightly or oxygen outlet of concentrator directly for fear for leak.
6. Press the power switch to “on” position. The power is plug in when the power indicator turns green. The oxygen concentrator is in working state.

   Press the key “⏻” on the panel, the oxygen concentrator will turn into running mode, or from running mode into standby mode. In working state, the LED Monitor will show the single operation time (5 digits for hours) and total operation time (2 digits for hours and two figures for minutes), timing mode, (the symbol of “---” after “timing shutdown” displays that the automatically shutdown has not been started; the figures after the “timing shutdown” show the remaining time before timing shutdown). Press the keys of “⊕” and “⊖” on the panel, and the time of timing shutdown could be increased or reduced. The indicator code will show in the case of occurrence of abnormal situation of oxygen concentrator for the service professional to repair the concentrator.
7. Adjust the meter to proper flow, the scale to which central float correspondent is the actual flow. In the ready mode, it cannot be adjusted to “0” bit in any time. The patient should use the equipment under the doctor’s advice.
8. Adjust the cannula to appropriate position for easy inhale of the pure oxygen and get maximum comfort. The oxygen density could be reached to 90% within 12 minutes.
9. Please shut down the oxygen concentrator after use. Pull out the power pin and take care of the cannula for another use.

10 Atomization (for -M &-N models)

1. Take out the accompanied nebulizer, pour into proper atomized liquid by doctor's advice, fix the water laps and tighten the cover in the clockwise.
2. Unscrew the atomization end cap and insert the atomization tube. Connect the other head of the atomization tube with the connecting nozzle on the nebulizer bottom.
3. Turn on the oxygen generator and put the bite into the mouth or wear a good atomized mask to receive atomized inhalation treatment.
4. The pressure range of atomizing oxygen concentrator is 60kPa~ 250kPa.
5. The atomization rate of the nebulizer on the oxygen concentrator ≥0.2mL/min.

11 Timing and Remote Control

1. Timing operation

KSOC oxygen concentrator can be shut down with timing equipment. The longest period is 10 hours. The timing interval can be 10 minutes (within 1 hour timing) or 30 minutes (more than 1 hour timing). When the shut hour is set, the system comes into count down time and the oxygen concentrator LCD will shows the remaining time. When Remaining time becomes 0, the oxygen concentrator will shut automatically and will go to sleeping status.

2. Remote control

When the oxygen concentrator is in the dormant state, it can be restarted by use of wireless remote control launcher. When it's in the state of working state, the remote control can operate such activities as timing and shutdown. The maximum remote control distance is 50m.

12 Alarm and Indicator System

⚠1. Alarm system design aims at monitoring the working oxygen concentrator in case of such situations as power off, abnormal pressure or indicator of running condition of the equipment. All alarms of the concentrator are technical alarms.

It includes an acoustic alarm system and a visual alarm system. The power is on, there will be a buzzing sound when power disconnects at any time together with the red light on, which is called high priority audible alarm. During normal operation, please shut down the concentrator if there is any alarm.

2. The oxygen purity indicator will clearly show current oxygen purity range（indicator error is ±3%）

a. The indicator lights yellow: oxygen purity＜82%
   If the yellow light on, it means purity less than 82% but it meets the demand of normal use.
b. The indicator lights yellow and the fault code shows “E05”: the air pressure of the inside tube > 260kPa or the magnetic valve anomaly.
c. The indicator lights yellow and the fault code shows “E02”: the air pressure of the inside tube < 20kPa or the pipe shedding.

Please turn off the concentrator immediately and check whether the in/ outlet of the oxygen concentrator is blocked or not. Keep the in/ outlet clean and then restart the concentrator. If there still has alarm, please turn off the concentrator and inform the local distributor or manufacturer.

3. Applicable condition for the indicator of oxygen concentrator:
   Environmental temperature: 5℃-40℃
   Relative humidity: ≤ 75%
   Pressure: 86kPa ~106kPa
4. Settlement of pressure alarm system of concentrator (medium priority alarm). When the oxygen delivery system appears abnormal and leads to the airway behaving abnormally, the pressure alarm will inform the user with yellow light on and screen display code: E02 or E05 on the LCD, and the inner compressor circuit will be cut off as well. Please shut down the concentrator in the case of pressure alarm, and check and make sure the

cleanness of outlet and inlet of air without any blocks. And then restart the equipment, please inform the distributor or manufacturer and shut down the concentrator if the alarm is still on.

5. Total running time display: The LCD of oxygen concentrator will show the current running time of each normal operation and total running time of oxygen concentrator, convenient for user to operate regular necessarily maintenance. The maximum recording time of total running time is 99999 hours.

13 Maintenance and Service

1. Cleaning of the case

It's helpful for normal use to keep the oxygen concentration clean for long. Use the warm and non-friction detergent and soft cloth without fleece to wipe the case of the oxygen concentrator. Please cut off the power to ensure safety.

2. Cleaning of the humidifier

⚠ Please empty the humidifier each time after using the equipment.

Wash the humidifier every day.

a. Pull out the connection soft tube and take out the humidifier.
b. Turn the lid open. Wash it with water. You can use a clean brush or towel to clean it if there is any besmirch. You can use warm neutral detergent or vinegar solution (1V vinegar with 10V water added in will have sterilization effect) to wash the humidifier. Then put in the clean water to prescribed level.

3. Cleaning of filter

Exposed to the ambient, the filter window of oxygen concentrator should be cleaned at least once a month. Push downward the filter window clock, open the filter window, take out the filter window from which takes out the filter sponge, and then clean the sponge and dry it.

⚠ Make sure the filtration sponge dried and then fix to use, or it will influence the use age.

Intake air filter inside oxygen concentrator should be replaced at least once or twice a year. The inner intake air filter could be seen when the transom is removed. Remove the used inner intake air filter to replace a new one as shown in below figures.

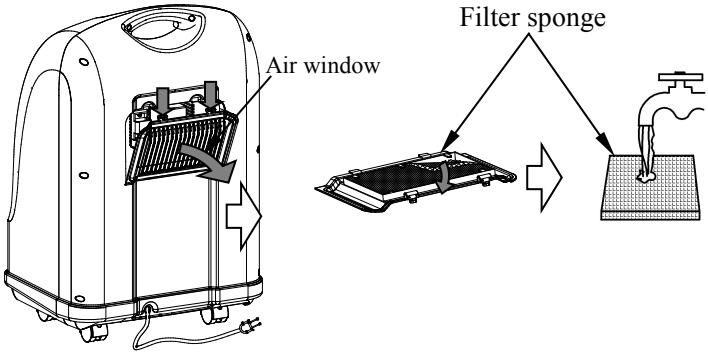

4. The replacement of over load protector:

When suspect or identify over load protector works (power Link normal Start up, power outage alarms), press the reset button in the scuttle of the oxygen concentrator back shield. The overload protector locates on the back of concentrator as shown in below figure.

5. Replacement of battery

⚠ **Please take the batteries out of the controller if unused for a long time.**

It uses 23A 12V battery to do wireless remote control. When it cannot works, the battery may not have sufficient power. Please replace the battery periodically with the same battery and be careful of the affirmative and negative pole.

14 Disposable

Please dispose of the disposable cannula, filter sponge and defective oxygen concentrator according to local relative laws in case of environmental pollution

15 Storage and Transportation

1. The unit should be stored -40℃ ～ 55℃, Relative humidity ≤93%. Pressure 50kPa -106kPa, in the nice environment without the corrosive air and with a good wind.
2. Be careful to transport or convey, do not let it reversal or thwart, tilt angle not greater than 5°.

16 Troubleshooting

Problems	Potential Causes	Solutions
After turned on the switch, the light and concentrator doesn't work.	1. The plug doesn't insert the switch firm. 2. No power. 3. Overload protector protection	1. Push the plug. 2. Check the power. 3. Press the button of overload protector.
After turned on the switch, the light works, but the concentrator doesn't work.	1. Air compressor protection. 2. Inlet or outlet jammed. 3. Ambient temperature is lower than 5℃	1. Renew the oxygen concentrator. 2. Clean the filter and check if anything jammed intake. 3. Rise the ambient temperature.
Cannot obtain the requested current capacity.	1. Nose sucker jammed or damaged. 2. Mask jammed or damaged; 3. Wet bottles jammed or damaged. 4. Oxygen tubes surpass the stipulation or have the bend.	1. Change or rectify the oxygen tubes. 2. Take down the wet bottle, clean or change it.

If it's not in the above cases and there is still no oxygen output, please contact the distributor or the manufacturer.

Screen prompt code and processing

Fault code	Failure description
E01	25 seconds after running the concentrator or longer time that the air pressure cannot reach the regular standard
E02	The air pressure decreases below the minimum range(20Kpa) suddenly
E05	The air pressure rises above the maximum range(260Kpa) suddenly
E35	The temperature detect switch of compressor is unconnected or beyond the allowable range

17 Service

In the normal condition of usual use and storage, the company is responsible for free repair and replacement if the concentrator cannot be used within a week after sold (within 12 month of commercial storage). The user can take the oxygen concentrator to the company following service department or agency or distributor for free repair with the invoice and warranty card if the equipment cannot be used within 12 month after sold. More than 12 month, the company provides the parts to repair with reasonable charge if it could not be used.

The following conditions are not included within the warranty coverage:

1. damage and deformation caused by crush;
2. damage caused by water and rain;
3. abnormal working state caused by self-dismantle of user.

Notes:

1. **Please take care of the purchase invoice and maintenance card for service.**
2. **The non- controllable factor or the artificial damage is not applicable to maintenance scope.**
3. **This picture in this manual is for reference only. Please take the real product you receive as standard. No notice will be made in case of any update.**
4. **Pictures for reference only, subject to our available products.**

18 EMC Guidelines

Below cables information are provided for EMC reference.

Cable	Max. cable length, Shielded/unshielded		Number	Cable classification
AC Power Line	1.5m	shielded	1 Set	AC Power

Important information regarding Electro Magnetic Compatibility (EMC)

Oxygen Concentrator needs special precautions regarding EMC and put into service according to the EMC information provided in the user manual;
Oxygen Concentrator conforms to this IEC 60601-1-2:2014 standard for both immunity and emissions. Nevertheless, special precautions need to be observed:
Oxygen Concentrator with no Essential Performance/Following Essential Performance is intended used in Professional healthcare facility environment.

Essential Performance:

Noise: KSOC-3 Series ≤53dB；KSOC-5/KSOC-8 Series ≤54dB;
O_2 density (V/V):93%±3%

- **WARNING: Portable RF communications equipment (including peripherals such as antenna cables and external antennas) should be used no closer than 30 cm (12 inches) to any part of the Oxygen Concentrator, including cables specified by the manufacturer. Otherwise, degradation of the performance of this equipment could result."**
- The use of accessories, transmitters and cables other than those specified by Konsung, with the exception of accessories and cables sold by Konsung of Oxygen Concentrator as replacement parts for internal components, may result in increased emissions or decreased immunity of the Oxygen Concentrator.
- **WARNING: Use of this equipment Oxygen Concentrator adjacent to or stacked with other equipment should be avoided because it could result in improper operation."**

- When the AC input voltage is interrupted, the Oxygen Concentrator will shut down and if the power supply restored, it should be recovered by operator manually, this degradation could be accepted because it will not lead to unacceptable risks and it will not result in the loss of basic safety or essential performance.

EMI Compliance Table

- **WARNING: Portable RF communications equipment (including peripherals such as antenna cables and external antennas) should be used no closer than 30 cm (12 inches) to any part of the Oxygen Concentrator, including cables specified by the manufacturer. Otherwise, degradation of the performance of this equipment could result."**
- The use of accessories, transmitters and cables other than those specified by Konsung, with the exception of accessories and cables sold by Konsung of Oxygen Concentrator as replacement parts for internal components, may result in increased Emissions or decreased Immunity of the Oxygen Concentrator.
- **WARNING: Use of this equipment Oxygen Concentrator adjacent to or stacked with other equipment should be avoided because it could result in improper operation."**
- When the AC input voltage is interrupted, the Oxygen Concentrator will shut down and if the power supply restored, it should be recovered by operator manually, this degradation could be accepted because it will not lead to unacceptable risks and it will not result in the loss of basic safety or essential performance.

EMI Compliance Table

Table 1 - Emission

Phenomenon	**Compliance**	**Electromagnetic environment**
RF emissions	CISPR 11, Group 1, Class B	30 MHz to 1 GHz 3m

Harmonic distortion	IEC 61000-3-2 Class A	100Hz to 2kHz, 2.5minutes
Voltage fluctuations and flicker	IEC 61000-3-3	2 hours, Clause 5

NOTE: The Emissions characteristics of this equipment make it suitable for use in industrial areas and hospitals (CISPR 11 class A). If it is used in a residential environment (for which CISPR 11 class B is normally required) this equipment might not offer adequate protection to radio-frequency communication services. The user might need to take mitigation measures, such as relocating or re-orienting the equipment.

Table 2 - Enclosure Port

Phenomenon	Basic EMC standard	Immunity test levels
		Professional healthcare facility environment
Electrostatic Discharge	IEC 61000-4-2	±2kV, ±4kV, ±6kV contact ±2kV, ±4kV, ±8kV air
Radiated RF EM field	IEC 61000-4-3	3V/m 80MHz-2.5GHz 80% AM at 1kHz
Proximity fields from RF wireless communications equipment	IEC 61000-4-3	Refer to table 3
Rated power frequency magnetic fields	IEC 61000-4-8	3A/m 50Hz ＆60Hz

Table 3 – Proximity fields from RF wireless communications equipment

Test frequency (MHz)	Band (MHz)	Immunity test levels
		Professional healthcare facility environment
385	380-390	Pulse modulation 18Hz, 27V/m
450	430-470	FM, ±5kHz deviation, 1kHz sine, 28V/m

710	704-787	Pulse modulation 217Hz, 9V/m
745		
780		
810	800-960	Pulse modulation 18Hz, 28V/m
870		
930		
1720	1700-1990	Pulse modulation 217Hz, 28V/m
1845		
1970		
2450	2400-2570	Pulse modulation 217Hz, 28V/m
5240	5100-5800	Pulse modulation 217Hz, 9V/m
5500		
5785		

Table 4 – Input AC power Port

Phenomenon	Basic EMC standard	Immunity test levels
		Professional healthcare facility environment
Electrical fast transients/burst	IEC 61000-4-4	±2 kV 5kHz repetition frequency
Surges Line-to-line	IEC 61000-4-5	±0.5 kV, ±1 kV
Surges Line-to-ground	IEC 61000-4-5	Do not apply
Conducted disturbances induced by RF fields	IEC 61000-4-6	3V, 0.15MHz-80MHz 80%AM at 1kHz
Voltage dips	IEC 61000-4-11	＜5% of UT for 0.5 Period＆5s At 0º, 180º

		40% of UT for 5 Periods At 0º, 180º
Voltage interruptions	IEC 61000-4-11	70% of UT for 25 Periods At 0º, 180º

Table 5 – Signal input/output parts Port

Phenomenon	Basic EMC standard	Immunity test levels
		Professional healthcare facility environment
Electrical fast transients/burst	IEC 61000-4-4	±2 kV 5kHz repetition frequency
Conducted disturbances induced by RF fields	IEC 61000-4-6	3V, 0.15MHz-80MHz 80%AM at 1kHz